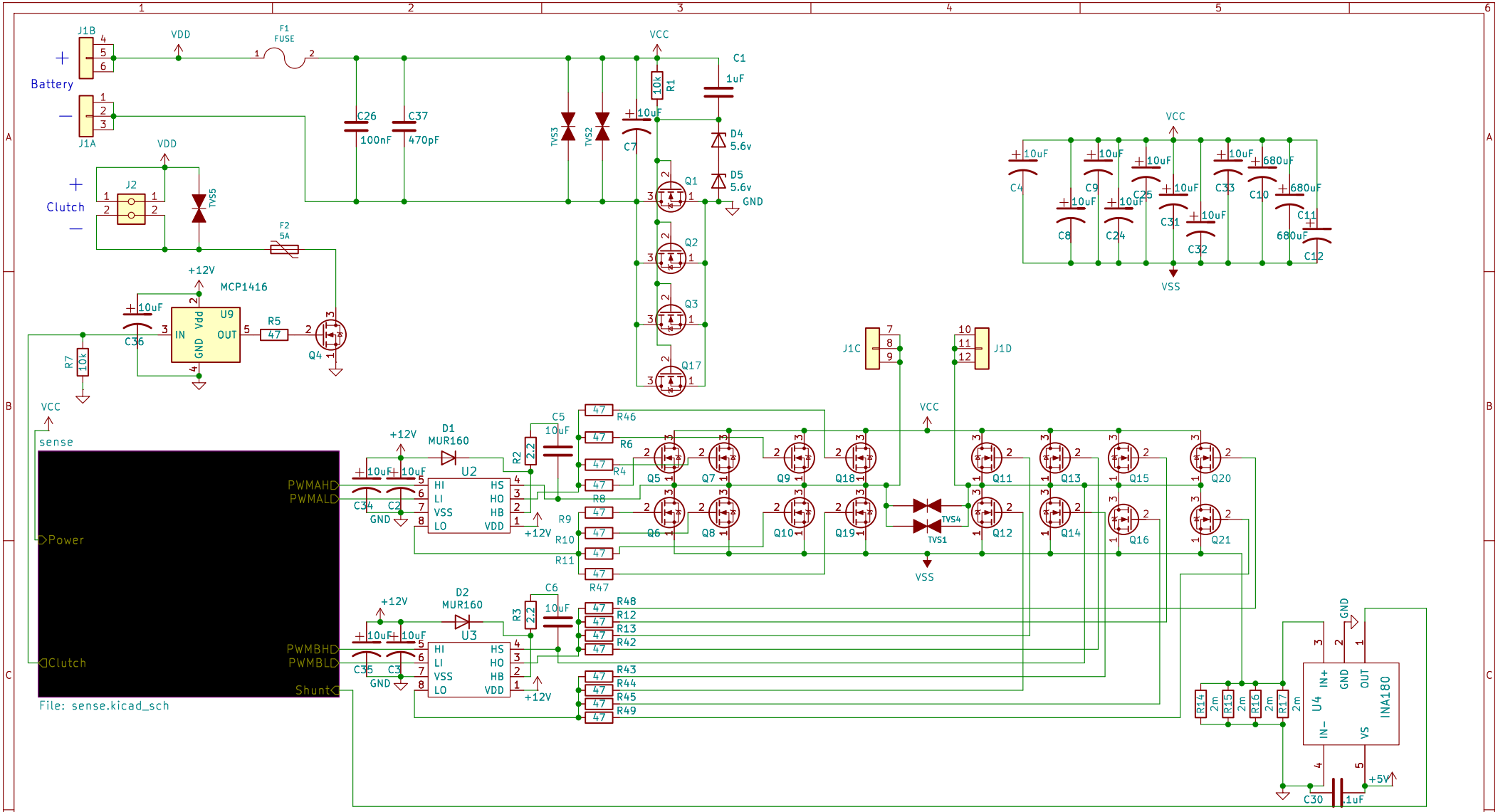

PYPILOT was imagined and designed by Sean D'EPAGNIER
Thanks to him for this fantastic boat autopilot

NAVITOP.FR

Sheet: /
File: 30A-controllerV1P.kicad_sch

Title: PYPILOT MOTOR CONTROLLER 30A +CLUTCH OUTPUT by NaviTop

Size: A4	Date: 2025-06-17	Rev: A
KiCad E.D.A. 9.0.0		Id: 1/2

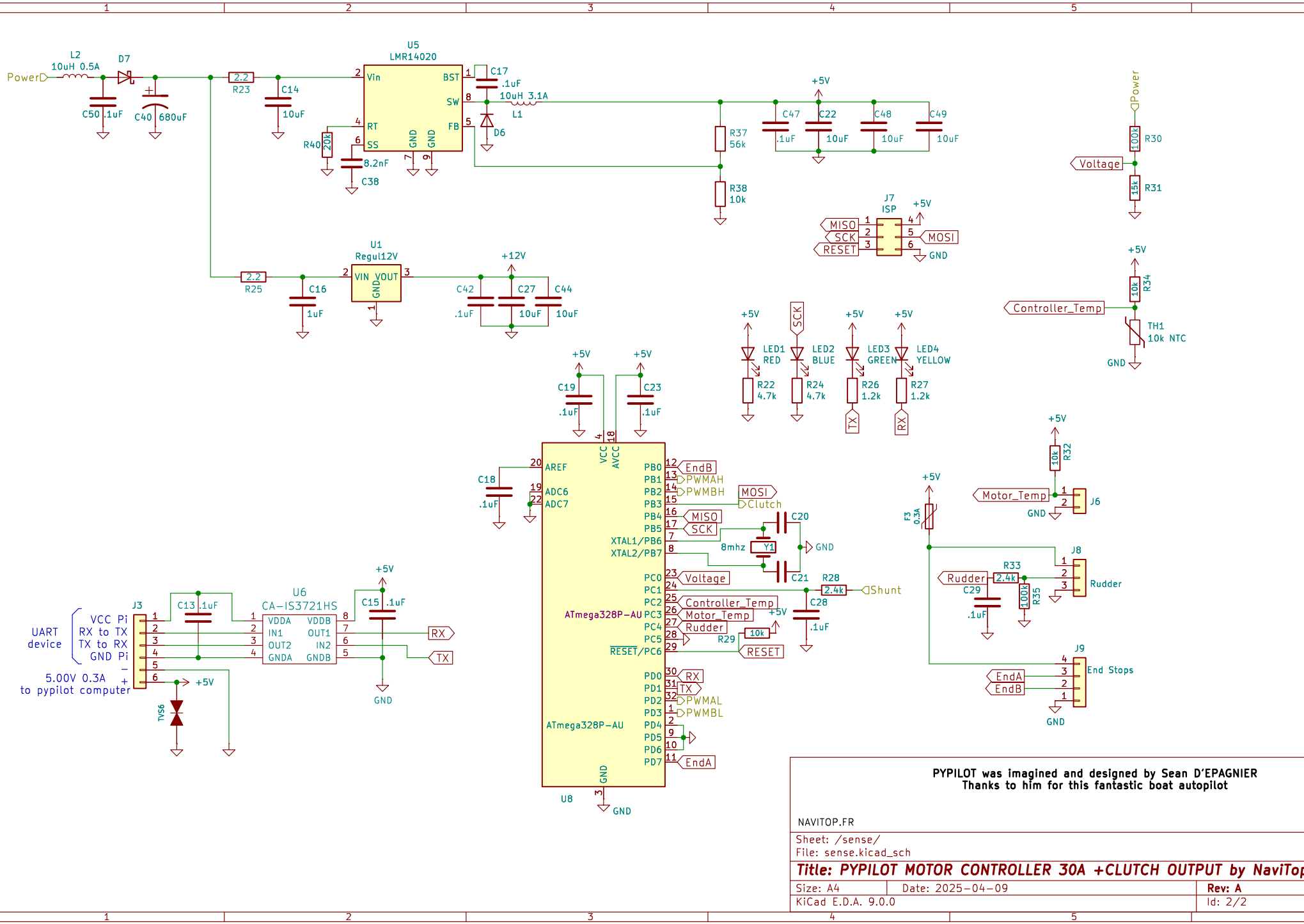
L2
10uH 0.5A
D7
Power
C50 .1uF
C40 680uF
2.2
R23
C14
10uF
U5
LMR14020
Vin
BST
SW
FB
RT
SS
GND
GND
C17
.1uF
10uH 3.1A
L1
D6
R40 20k
8.2nF
C38
R37
56k
R38
10k
+5V
C47 .1uF
C22 10uF
C48 10uF
C49 10uF
Power
R30 100k
Voltage
R31 15k
J7
ISP
MISO
SCK
RESET
MOSI
GND
+5V
U1
Regul12V
VIN VOUT GND
2.2
R25
C16
1uF
+12V
C42 .1uF
C27 10uF
C44 10uF
+5V
R34 10k
Controller_Temp
TH1
10k NTC
GND
LED1 RED
LED2 BLUE
LED3 GREEN
LED4 YELLOW
R22 4.7k
R24 4.7k
R26 1.2k
R27 1.2k
SCK
TX
RX
C19 .1uF
C23 .1uF
C18 .1uF
AREF
ADC6
ADC7
VCC
AVCC
ATmega328P-AU
XTAL1/PB6
XTAL2/PB7
8mhz
Y1
C20
C21
GND
PB0 EndB
PB1 PWMAH
PB2 PWMBH
PB3 MOSI Clutch
PB4 MISO
PB5 SCK
PC0 Voltage
PC1
PC2 Controller_Temp
PC3 Motor_Temp
PC4 Rudder
PC5
RESET/PC6 RESET
R28 2.4k
Shunt
C28 .1uF
R29 10k
PD0 RX
PD1 TX
PD2 PWMAL
PD3 PWMBL
PD4
PD5
PD6
PD7 EndA
U8
GND
+5V
R32 10k
Motor_Temp
J6
GND
F3 0.3A
J8
Rudder
R33 2.4k
C29 .1uF
R35 100k
J9
End Stops
EndA
EndB
GND
J3
UART device
VCC Pi
RX to TX
TX to RX
GND Pi
5.00V 0.3A to pypilot computer
C13 .1uF
U6
CA-IS3721HS
VDDA VDDB
IN1 OUT1
OUT2 IN2
GNDA GNDB
C15 .1uF
RX
TX
GND
TVS6
+5V
PYPILOT was imagined and designed by Sean D'EPAGNIER
Thanks to him for this fantastic boat autopilot
NAVITOP.FR
Sheet: /sense/
File: sense.kicad_sch
Title: PYPILOT MOTOR CONTROLLER 30A +CLUTCH OUTPUT by NaviTop
Size: A4
Date: 2025-04-09
Rev: A
KiCad E.D.A. 9.0.0
Id: 2/2