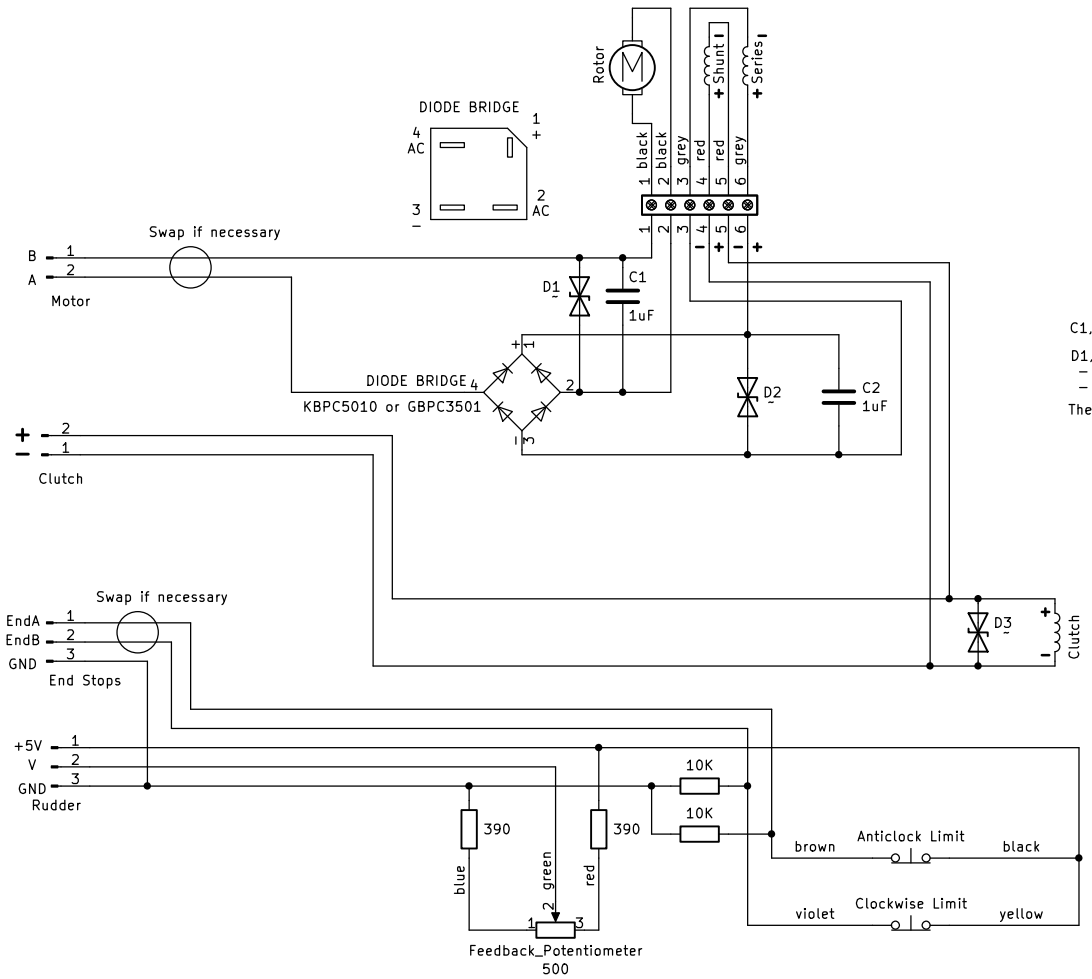

Connector 3 pin :
- End A : Yellow
- End B : brown
- GND : blue

C1, C2 : condensator 1uF 100V

D1, D2, D3 (TVS diodes):
- Drive 12V: 1.5KE22CA
- Drive 24V: 1.5KE47CA

These TVS diodes can be mounted in either direction.

The potentiometer and the closed limit switches are already in the NECO actuator

Adaptation drive unit NECO 17DR8 AND 35DR8
for use with Pypilot 30A motor controller

Sheet: /
File: NECO.kicad_sch

Title: PYPILOT motor controller with NECO drive unit

Size: A4	Date: 2025-12-23	**Rev: C - JMD**
KiCad E.D.A. 9.0.6		Id: 1/1